## LOCUS MAP

NOT TO SCALE

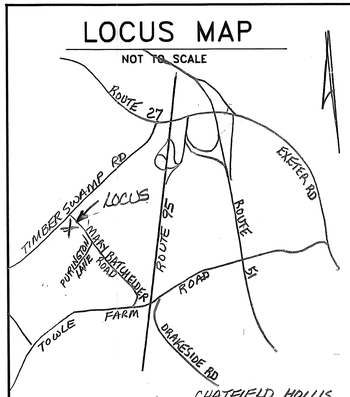


**SOIL CLASS:** 40B - CHATFIELD, HOLLIS, CANTON COMPLEX

(SOURCE: USDA-SCS SOIL SURVEY)

**BENCH MARKS:** DATUM = APPROVAL #184550 PER PLAN

#1 SET PK EDGE PAV ELEV. 77.57

#2 CENTER OF COVER EXISTANK EL 80.87

#3 SET NAIL 8" BIRCH EL 80.52

#4 SET NAIL IN UTIL POLE EL 79.10

**DESIGN INTENT:** BED BOTTOMS TO BE PLACED AS HIGH AS POSSIBLE WHILE MAINTAINING MIN. REQUIRED SLOPES FROM EXISTING CLEANOUT AND EXIS SEPTIC TANK. FOR BED A - USING PITS 2&3 - BB = 2' ABOVE O.G. AT EL 77.6 FOR BED B - USING PIT 1 - BB = 6' ABOVE O.G. AT EL 77.7 50% OF EACH BED AREA DOWNSLOPE (SEE PLAN VIEW)

**SUITABLE REPLACEMENT AREA:**

SYSTEM MUST BE REBUILT IN PLACE OR REDESIGNED.

**LEGEND:**

| | |
|---|---|
| 50 | EXISTING CONTOUR |
| (50) | PROPOSED CONTOUR |
| 50.0 | EXISTING SPOT ELEVATION |
| (50.0) | PROPOSED SPOT ELEVATION |

**NOTES:**

1. THIS PLAN IS NOT TO BE CONSTRUED AS A BOUNDARY SURVEY. PROPERTY LINES SHOWN ARE APPROXIMATED BASED ON INFORMATION FROM THE FOLLOWING SOURCE: "AS-BUILT PLAN OF FOUR SEASONS MHAMPTON NH SCALE 1"=50' JAN 1992 PARKER SURVEY ASSOC INC EXETER & SEABROOK NH" PLAN # 6440
2. NHDES-WS&PCD SUBDIVISION APPROVAL NUMBER: N/A PRE-EXIS LOT & USE REF. WS&PCD APPROVALS 123668, 184550.
3. THIS SYSTEM IS NOT DESIGNED TO HANDLE GARBAGE DISPOSAL WASTE.
4. NO SURFACE WATER OR WELL WITHIN 100' OF PROPOSED SYSTEM. (NO WELL WITHIN 200')
5. SUBSURFACE UTILITY LOCATIONS ARE AS SHOWN ON PLAN NOTE 1. (COPY ENCLOSED WITH APPLICATION)

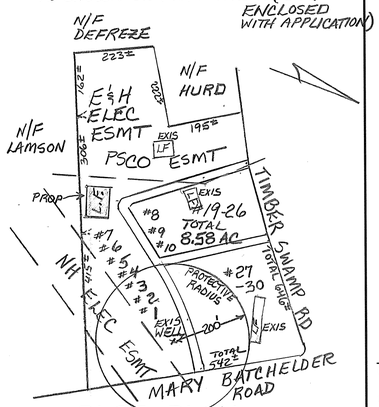


## PLOT PLAN

1" = APPROX 200'

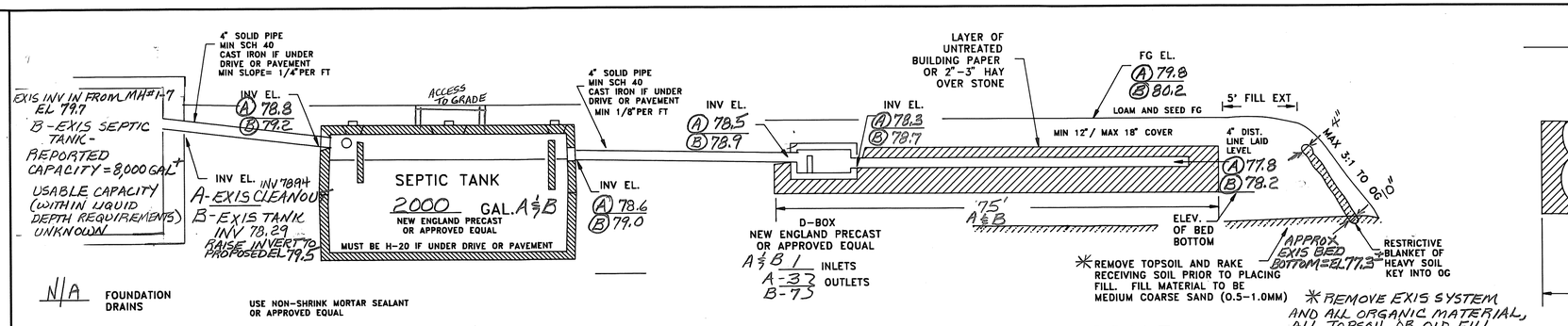


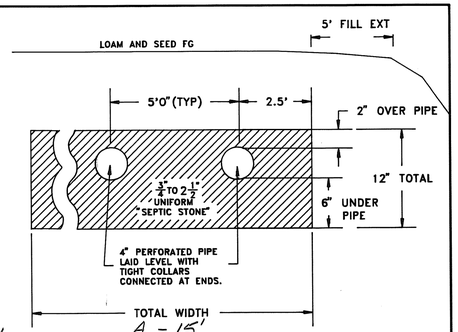


## CROSS SECTION DISPOSAL SYSTEM - NOT TO SCALE

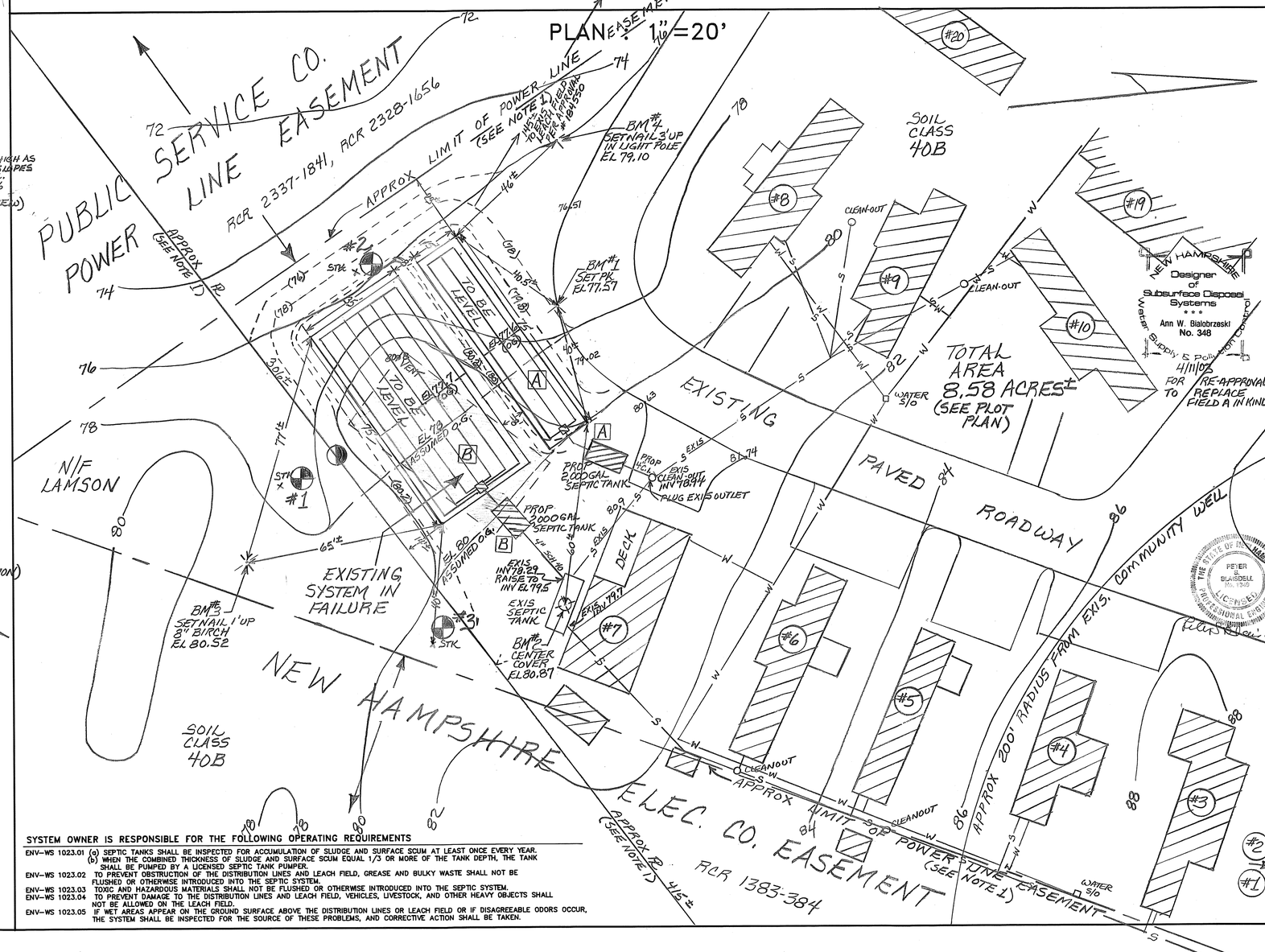


**SYSTEM OWNER IS RESPONSIBLE FOR THE FOLLOWING OPERATING REQUIREMENTS**

| | |
|---|---|
| ENV-WS 1023.01 | (a) SEPTIC TANKS SHALL BE INSPECTED FOR ACCUMULATION OF SLUDGE AND SURFACE SCUM AT LEAST ONCE EVERY YEAR. (b) WHEN THE COMBINED THICKNESS OF SLUDGE AND SURFACE SCUM EQUAL 1/3 OR MORE OF THE TANK DEPTH, THE TANK SHALL BE PUMPED BY A LICENSED SEPTIC TANK PUMPER. |
| ENV-WS 1023.02 | TO PREVENT OBSTRUCTION OF THE DISTRIBUTION LINES AND LEACH FIELD, GREASE AND BULKY WASTE SHALL NOT BE FLUSHED OR OTHERWISE INTRODUCED INTO THE SEPTIC SYSTEM. |
| ENV-WS 1023.03 | TOXIC AND HAZARDOUS MATERIALS SHALL NOT BE FLUSHED OR OTHERWISE INTRODUCED INTO THE SEPTIC SYSTEM. |
| ENV-WS 1023.04 | TO PREVENT DAMAGE TO THE DISTRIBUTION LINES AND LEACH FIELD, VEHICLES, LIVESTOCK, AND OTHER HEAVY OBJECTS SHALL NOT BE ALLOWED ON THE LEACH FIELD. |
| ENV-WS 1023.05 | IF WET AREAS APPEAR ON THE GROUND SURFACE ABOVE THE DISTRIBUTION LINES OR LEACH FIELD OR IF DISAGREEABLE ODORS OCCUR, THE SYSTEM SHALL BE INSPECTED FOR THE SOURCE OF THESE PROBLEMS, AND CORRECTIVE ACTION SHALL BE TAKEN. |

## TEST PIT DATA

DATE: 2/7/94

PIT #1 EL 77.6
0-6" LOAM & ROOT MAT
6-24" YELLOWISH TO DARK YELLOWISH BROWN (10YR 4/6 TO 5/6) FINE SANDY LOAM, GRANULAR FRIABLE
24-50" MIXED, PREDOM. DARK YELLOWISH BROWN (10YR 4/4 TO 4/6) LOAMY MEDIUM TO COARSE SAND, SOME GRAVEL, COARSE WITH DEPTH, GRAN FRIABLE → LOOSE
50-72" LIGHT OLIVE BROWN (2.5Y 5/4 TO 5/6) SILTY FINE SAND, MOIST FRIABLE, W/ SOME VEINS 2.5Y 5/4 SILT LOAM RESTRICTIVE
ESHWT @ 42" OBS $H_2O$ @ 44", ROOTS TO 4', NO REFUSAL TO 72" ROTTEN LEDGE @ 72"±

PIT #2 EL 75.6
0-6" LOAM & ROOT MAT
6-20" MIXED FILL (OLD) PREDOM. 10YR 4/4 TO 4/6 FINE SANDY LOAM GRAN FRIABLE
20-22" ORIGINAL TOPSOIL
22-48" DARK YELLOWISH BROWN (10YR 4/6) — GRAVELLY FINE SANDY LOAM, GRANULAR FRIABLE
48-56" YELLOWISH BROWN (10YR 5/4) GRAVELLY LOAMY FINE TO MED SAND, GRANULAR FRIABLE
56-96" MIXED, PREDOM. 10YR 4/4 GRAVELLY LOAMY COARSE SAND, FRIABLE → LOOSE
ESHWT @ 60"+ ROOTS TO 72"±, OBS $H_2O$ @ 72", NO REFUSAL

PIT #3 EL 80.3
0-8" LOAM & ROOT MAT
8-24" DARK YELLOWISH BROWN (10YR 4/6) FINE SANDY LOAM GRANULAR FRIABLE
24-42" YELLOWISH BROWN (10YR 5/4) LOAMY FINE TO MEDIUM SAND, SOME GRAVEL GRAN. FRIABLE
42-50" 10YR 5/4 FINE TO MED SAND, GRAN. FRIABLE
50-84" MIXED, PREDOM. 10YR 4/4 TO 4/6 GRAVELLY COARSE SAND, LOOSE GRANULAR
ESHWT @ 46", ROOTS TO 4"+, OBS $H_2O$ @ 64", NO REFUSAL

PERC TEST DATE 2/8/94 DEPTH 24" RATE 3 MIN/IN (133 SF/100 GPD)

DESIGN LOADING
FIELD A - MH's 8, 9, 10 = TWO 2 BED @ 300 = 600, ONE 1 BED @ 225 = 225 } TOTAL 825 GPD
133 x 8.25 = 1097 SF REQ'D — 15 x 75 = 1125 SF PROVIDED
FIELD B - MH's #1-7 = FIVE 2 BED @ 300 = 1500, TWO 1 BED @ 225 = 450 } 1950 GPD
133 x 19.5 = 2594 SF REQ'D — 35 x 75 = 2625 SF PROVIDED
SEPTIC TANKS - PROP 2,000 GAL A FOR 825 GPD (#8, 9, 10)
FOR 1ST ADD 2,000 GAL B TO EXIS TANK (USABLE CAPACITY QUESTIONABLE)

*AMENDED PROPOSED REPLACEMENT

# SEPTIC SYSTEM PLAN

EXIS SYSTEM IN FAILURE

LOCUS: FOUR SEASONS MOBILE HOME PARK
MARY BATCHELDER ROAD
HAMPTON, NH

OWNER: RICHARD A. & RUTH BLEY
PO BOX 154
MELVIN VILLAGE, NH 03850

APPLICANT:
STOCKTON SERVICES
PO BOX 1306
HAMPTON, NH 03842

NEW HAMPSHIRE Designer of Subsurface Disposal Systems Peter S. Blaisdell No. 341

DATE: 2/21/94 *AMENDED 3/16/94

APPROVAL: #202988 (SEE CONDITIONS)

REAPPROVED FOR REPLACEMENT IN KIND SYSTEM A - #CA 2003051596

184

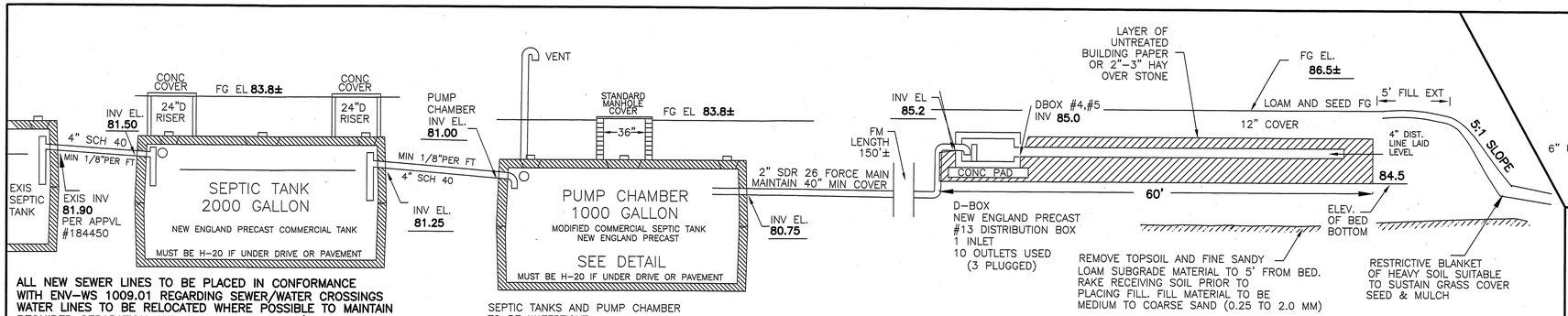


**ALL NEW SEWER LINES TO BE PLACED IN CONFORMANCE WITH ENV-WS 1009.01 REGARDING SEWER/WATER CROSSINGS WATER LINES TO BE RELOCATED WHERE POSSIBLE TO MAINTAIN REQUIRED SEPARATION AND SLEEVED WHERE 10' OFFSET CANNOT BE MET (APPLIES ONLY WHERE NEW SYSTEM COMPONENTS ARE INSTALLED).**

SEPTIC TANKS AND PUMP CHAMBER TO BE WATERTIGHT
USE NON-SHRINK MORTAR SEALANT OR APPROVED EQUAL

## CROSS SECTION DISPOSAL SYSTEM – NOT TO SCALE

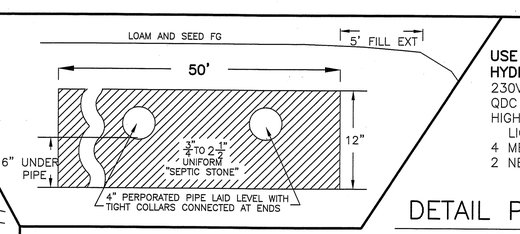


**USE 2 PUMPS**
**HYDROMATIC SHEF50M2 OR EQUAL**
230V ELINE CONTROL PANEL
QDC RAIL PACKAGE
HIGH WATER ALARM (BELL AND LIGHT) HOUSED AT TANK
4 MERCURY FLOATS
2 NEMA 4X JUNCTION BOXES

## DETAIL PUMP CHAMBER

NOT TO SCALE

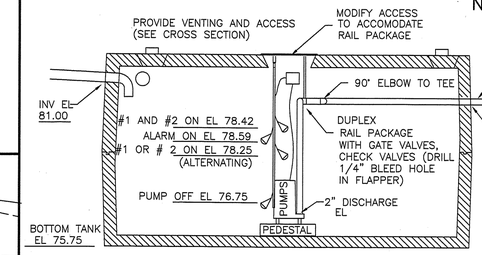


**CALCULATIONS**

STATIC LIFT: 8.5 SAY 9 FT
F.M. LEGTH = 150'± +50'(FITTINGS) = 200'
PUMP SPECIFIED WILL DELIVER 45GPM± AT 37' TDH
FLOAT SETTINGS SHOWN WILL PROVIDE 384 GAL PER CYCLE FOR 6.2 CYCLES PER DAY BASED ON 2400 GPD DESIGN LOADING
PUMP RUNNING TIME = 384/45GPM = 8.5 MIN

**SOIL CLASS:** 40B–CHATFIELD–HOLLIS–CANTON

(SOURCE: USDA–SCS SOIL SURVEY)

**BENCH MARKS:** DATUM = APPROVAL #184550 PER PLAN SEE

- #1 SET NAIL 15" PINE EL 85.82
- #2 SET NAIL 15" OAK EL 82.07
- #3 SET NAIL UTILITY POLE EL 87.98
- #4 SET MAG NAIL EL 85.3

**DESIGN INTENT:**

THE BOTTOM OF THE EFFLUENT DISPOSAL SYSTEM (EDS) SHALL BE CONSTRUCTED AT EL 84.5. THAT IS APPROX 2.0 FEET BELOW ORIGINAL GROUND AT EDS HIGH CONTOUR (EL 86.5).

**SUITABLE REPLACEMENT AREA:**

SYSTEM MUST BE REBUILT IN PLACE OR REDESIGNED.

**LEGEND:**

- 50 — EXISTING CONTOUR
- (50) — PROPOSED CONTOUR
- 50.0 — EXISTING SPOT ELEVATION
- SEWER LINE CLEANOUT
- WATER SHUTOFF
- UTILITY POLE

**NOTES:**

1. THIS SYSTEM IS NOT DESIGNED TO HANDLE GARBAGE DISPOSAL WASTE.
2. NO HYDRIC SOILS WITHIN 75' OF PROP. SYSTEM
3. UNDERGROUND UTILITY LINE LOCATIONS ARE BASED PRIMARILY ON TITLE INSURANCE SURVEYS AND MUST BE VERIFIED AND CORRECTED PRIOR TO INSTALLATION IT IS UNDERSTOOD THAT AMENDED PLANS WILL BE PREPARED TO REFLECT ACTUAL LOCATIONS IN THE AREA OF PROPOSED NEW TANKS.
4. NITRATE SETBACKS BETWEEN EXISTING SYSTEMS AND PROPOSED SYSTEM DO NOT OVERLAP. 2400 GPD NEW SYSTEM REQUIRES 120' DOWNGRADIENT SETBACK. ALL SETBACKS TO PROPERTY LINES EXCEED 120'.
5. REFERENCE APPROVALS #123368 AND #202988 FOR EXISTING SYSTEMS. SEE ALSO #184450 AND SUBDIVISION APPROVAL #20748.
6. SEE "AS BUILT PLAN FOR FOUR SEASONS IN HAMPTON, NH, SCALE:1"=50', JAN 1992, REV OCT 1994, PARKER SURVEY ASSOC, INC, EXETER, NH" PLAN #6825 FOR LAYOUT OF ENTIRE PROPERTY.

## PLAN VIEW: 1"=20'

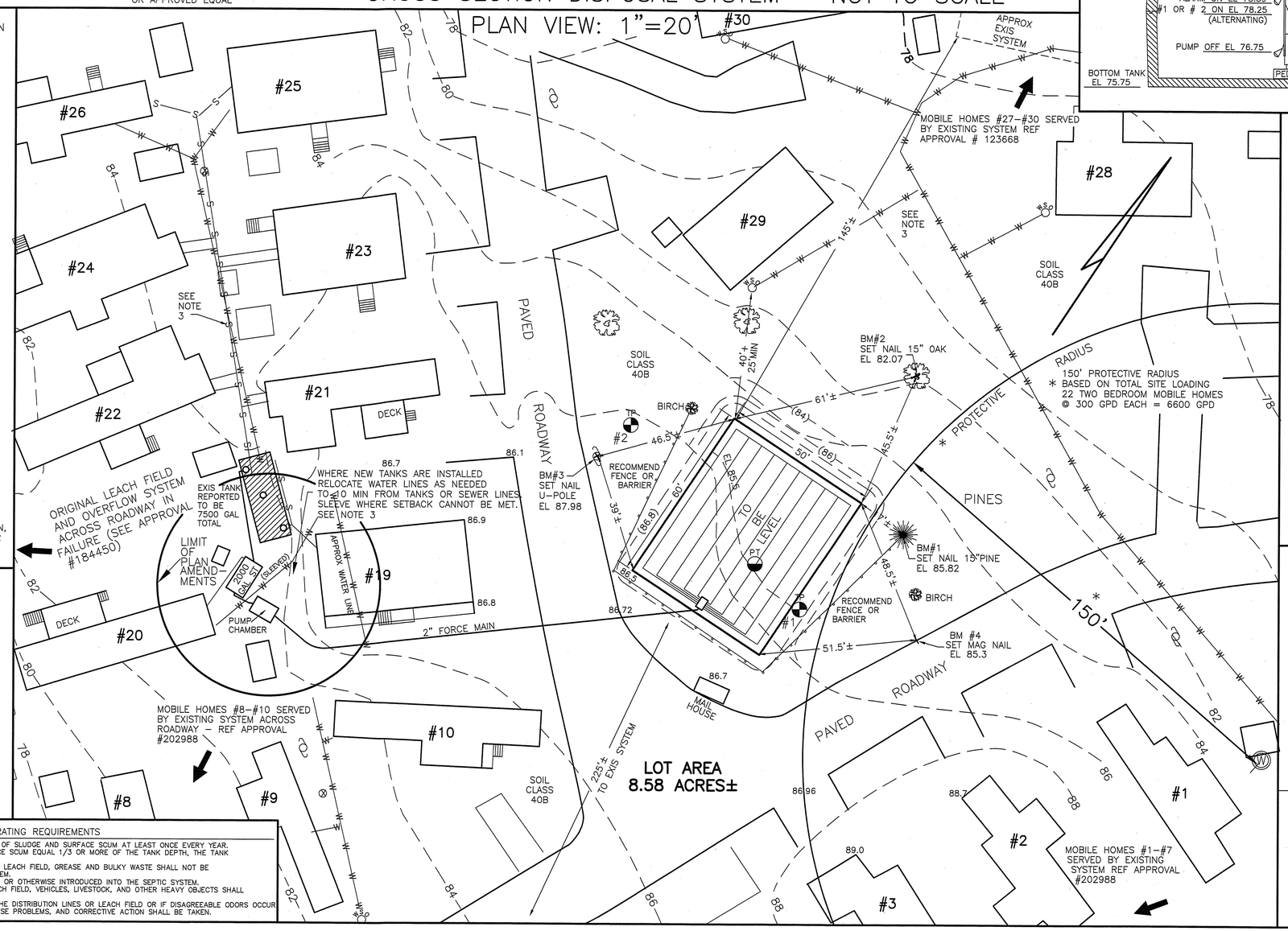


## LOCATION PLAN

NOT TO SCALE

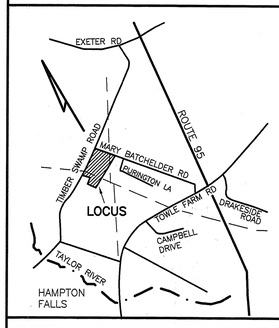


## TEST PIT DATA

DATE: DECEMBER 20, 2001

**#1 TEST PIT ELEVATION 85.5**

0–4" LOAM AND ROOT MAT (TO BE REMOVED)
4–24" 10YR4/6 GRAVELLY FINE SANDY LOAM GRANULAR FRIABLE (TO BE REMOVED)
24–84" MIXED, PREDOM 10YR4.4 TO 4/6 MEDIUM TO COARSE GRAVELLY SAND, LOOSE GRANULAR, SOME STONES
84–96" 2.5Y6/3TO6/4 FINE SAND, MOTTLED, GRANULAR FRIABLE
ESHWT@60" (STAINING), NO OBS H20, NO REFUSAL

**#2 TEST PIT ELEVATION 86.3**

0–4" LOAM AND ROOT MAT (TO BE REMOVED)
4–20" 10YR5/6 GRAVELLY FINE SANDY LOAM GRANULAR FRIABLE (TO BE REMOVED)
20–96" MIXED, 10YR4/4 TO 4/6 MEDIUM TO COARSE SAND AND GRAVEL, MANY STONES TO 10"
NO EVIDENCE OF SHWT, ROOTS TO 7'+,
NO OBSERVED WATER, NO REFUSAL

## PERC TEST DATA

< 2 MIN/IN AT 24" DEPTH

DESIGN LOADING: EIGHT 2 BEDROOM MOBILE HOMES (#19–#26) @300 GPD EACH = 2400 GALLONS PER DAY
SYSTEM AREA REQUIRED FOR 2 MIN/IN PERC RATE = 125 SF/100 GPD = 125 X 24 = 3000 SF REQUIRED
SYSTEM AREA PROPOSED = 50' X 60' = 3000 SF PROVIDED

SEPTIC TANK CAPACITY REQUIRED = 0.75X2400=1800+1125 = 2925 GPD REQUIRED
EXISTING TANK CAPACITY = 7500 GAL (REF APPROVAL #184450)
7500 + 2000 GAL TANK PROPOSED = 9500 GAL PROVIDED

PROPOSED REPLACEMENT

# SEPTIC SYSTEM PLAN

EXISTING FAILED SYSTEM

LOCUS: FOUR SEASONS MOBILE HOME PARK
MARY BATCHELDER RD & TIMBER SWAMP RD
HAMPTON, NH

OWNER: RICHARD A. & RUTH BLEY
PO BOX 154
MELVIN VILLAGE, NH 03850

APPLICANT:
STOCKTON SERVICES
PO BOX 1306
HAMPTON, NH 03842

NEW HAMPSHIRE Designer of Subsurface Disposal Systems
Ann W. Bialobrzeski
No. 348
Water Supply & Pollution Control

DATE: JANUARY 16, 2002

APPROVAL: CA2002040447*
AMENDED 4/8/02
TANKS ONLY *
(HORIZONTAL LOCATIONS ONLY)

184-1

SYSTEM OWNER IS RESPONSIBLE FOR THE FOLLOWING OPERATING REQUIREMENTS

ENV–WS 1023.01 (a) SEPTIC TANKS SHALL BE INSPECTED FOR ACCUMULATION OF SLUDGE AND SURFACE SCUM AT LEAST ONCE EVERY YEAR. (b) WHEN THE COMBINED THICKNESS OF SLUDGE AND SURFACE SCUM EQUAL 1/3 OR MORE OF THE TANK DEPTH, THE TANK SHALL BE PUMPED BY A LICENSED SEPTIC TANK PUMPER.
ENV–WS 1023.02 TO PREVENT OBSTRUCTION OF THE DISTRIBUTION LINES AND LEACH FIELD, GREASE AND BULKY WASTE SHALL NOT BE FLUSHED OR OTHERWISE INTRODUCED INTO THE SEPTIC SYSTEM.
ENV–WS 1023.03 TOXIC AND HAZARDOUS MATERIALS SHALL NOT BE FLUSHED OR OTHERWISE INTRODUCED INTO THE SEPTIC SYSTEM.
ENV–WS 1023.04 TO PREVENT DAMAGE TO THE DISTRIBUTION LINES AND LEACH FIELD, VEHICLES, LIVESTOCK, AND OTHER HEAVY OBJECTS SHALL NOT BE ALLOWED ON THE LEACH FIELD.
ENV–WS 1023.05 IF WET AREAS APPEAR ON THE GROUND SURFACE ABOVE THE DISTRIBUTION LINES OR LEACH FIELD OR IF DISAGREEABLE ODORS OCCUR THE SYSTEM SHALL BE INSPECTED FOR THE SOURCE OF THESE PROBLEMS, AND CORRECTIVE ACTION SHALL BE TAKEN.